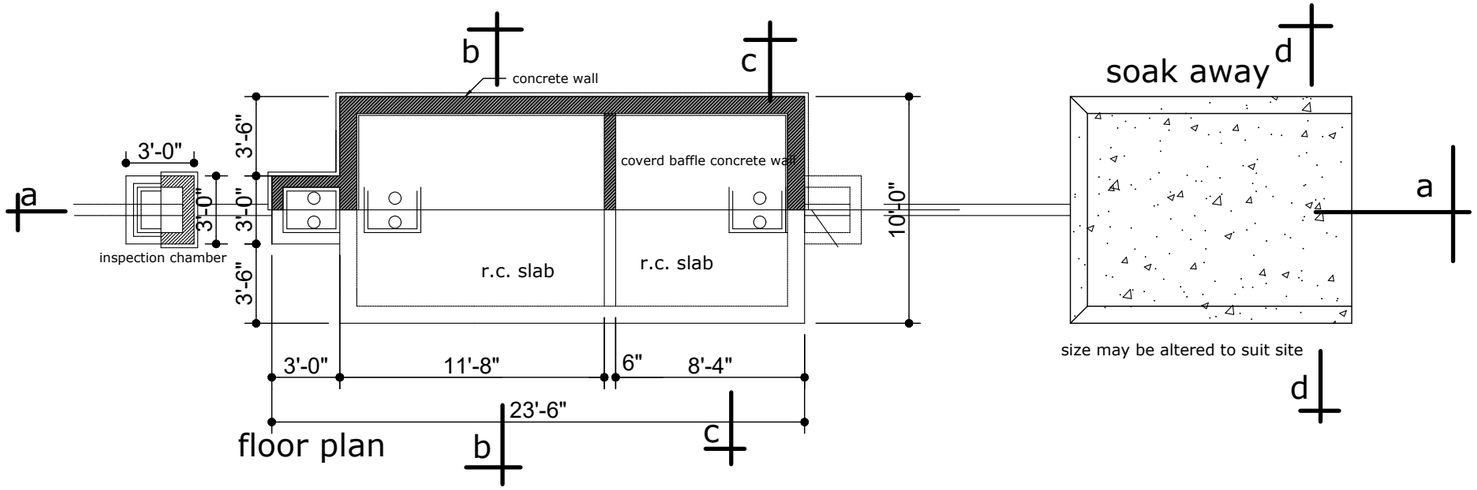

floor plan

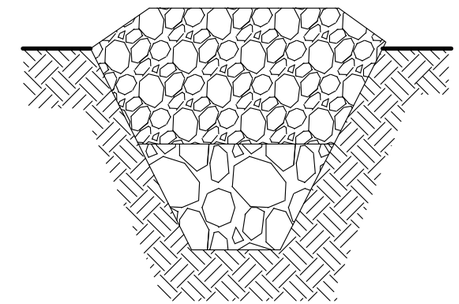

section d-d

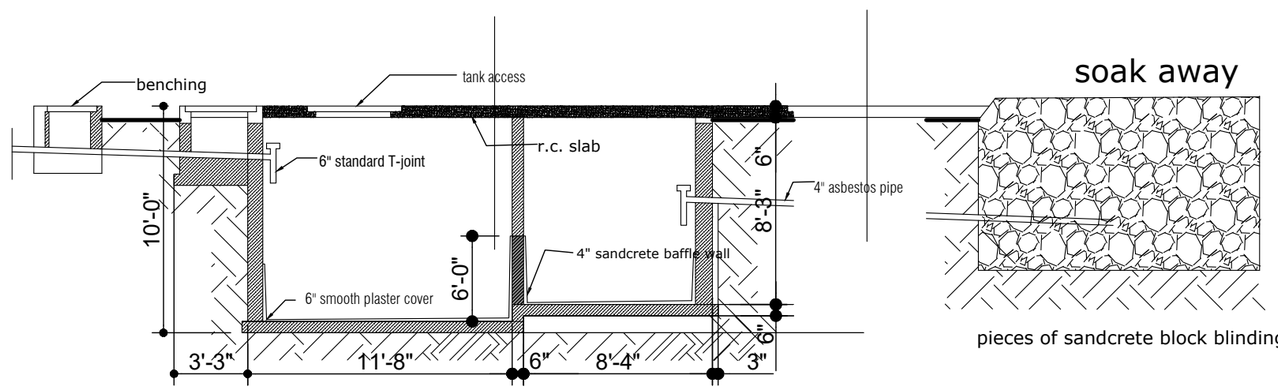

section a-a

pieces of sandcrete block blinding

typical manhole

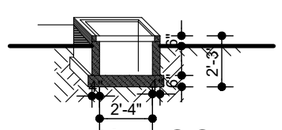

section f-f

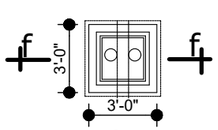

plan

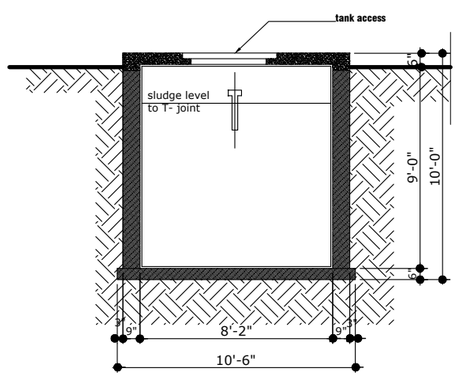

section b-b

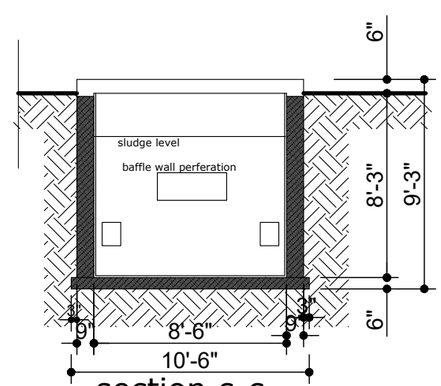

section c-c

For more plans like these visit: freecadfloorplans.com

Project name: 64x60 house plan with 4 bedrooms

Drawing title: Details of Sanitary Facilities

CAD drawing: Elvis Alcequiez

Scale: Not to scale

Sheet number: 05

This plans are for educational or personal use only, it is illegal by copyright laws to redistribute, resell, or republish online.